OLYMPUS®

i-SPEED

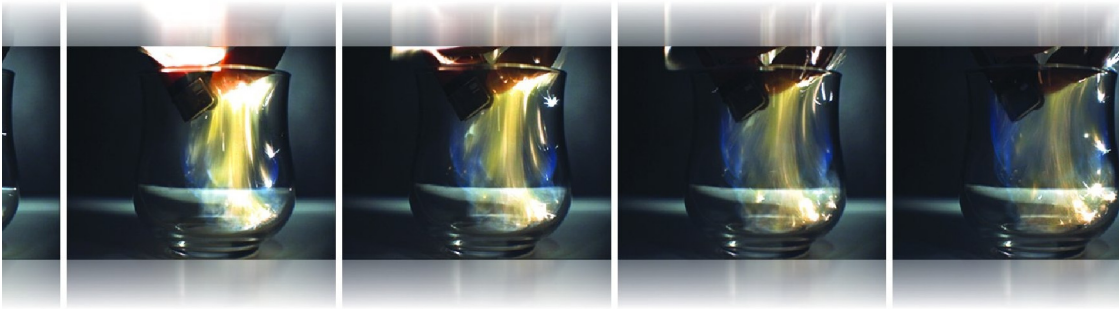

INSTRUCTIONS

HIGH SPEED VIDEO CAMERA SYSTEM

CE

Contents

Important Information — Please Read Before Use

Instruction manual

This instruction manual contains essential information on using this equipment safely and effectively. Before use, thoroughly review this manual and the manuals of all equipment which will be used during the procedure and use the equipment as instructed.
Keep this and all related instruction manuals in a safe, accessible location.

If you have any questions or comments about any information in this manual, please contact Olympus.

Repair and modification

The camera has a replaceable fuse on the rear panel and does not contain any other user-serviceable parts. Do not disassemble, modify or attempt to repair, user injury and/or equipment damage can result. Please contact Olympus for service/repair.

Signal words

The following signal words are used throughout this manual:

CAUTION
Indicates a potentially hazardous situation which, if not avoided, may result in minor or moderate injury. It may also be used to alert against unsafe practices or potential equipment damage.

NOTE
Indicates additional helpful information.

Operating precautions

Olympus will only be considered responsible for the safety, reliability and performance of the system if the following precautions are strictly adhered to:

1. Do not operate the equipment in the presence of combustible gases or vapours.
2. If in any doubt about the operating environment, contact Olympus.
3. The *i-SPEED* must not be used for High-G applications as detachment of the camera, camera parts, accessories or connectors may result.
4. The CDU is not High-G rated.
5. The equipment has no resistance to fluid ingress - do not use the equipment where ingress of fluid is likely, or already suspected.
6. Do not operate the equipment in live electrical or moving machinery as electric shock or physical injury to the user may result.
7. Do not operate the equipment when connected to a borescope/fiberscope which is in contact with live electrical or moving machinery as electric shock or physical injury to the user may result.
8. When a recorded image is frozen on the display, take care not to touch subject equipment which may still be moving.
9. Do not connect the equipment to a vehicle battery while the vehicle is running as the power supply may rise to 15V and cause damage to equipment.
10. Ensure all equipment is earthed (grounded) to the same potential as the camera prior to operation. Failure to earth equipment may result in electric shock.
11. The power supply provided must be connected to a suitably grounded AC outlet.

12. Avoid subjecting the unit to heavy knocks or shock loadings, as these will reduce the effective life and reliability of the components within the unit.
13. Before operating the unit, check that cooling vents are not blocked or obstructed.

General notes

- The *i-SPEED* viewer software runs on Microsoft Windows 2000 or Windows XP. For the basic operating procedures of these operating systems, refer to the operating system manual.
- Microsoft, Windows, Windows NT and MS-DOS are either registered trademarks or trademarks of Microsoft Corporation in the United States and/or other countries.
- Acrobat Reader is either registered trademark or trademark of Adobe Corporation in the United States and/or other countries.
- Quick Time is either registered trademark or trademark of Apple Computer Inc in the United States and/or other countries.

End-user license agreement

NOTE

This license agreement applies to the software supplied on disk with the *i-SPEED* system and not the *i-SPEED* camera itself.

READ THE FOLLOWING TERMS AND CONDITIONS OF THIS AGREEMENT CAREFULLY BEFORE OPENING PACKAGE CONTAINING THE PROGRAM DISKETTES (THE SOFTWARE). BY OPENING THIS PACKAGE CONTAINING THE SOFTWARE YOU ACCEPT AND AGREE TO THE TERMS AND CONDITIONS HEREOF. IF YOU DO NOT AGREE TO BE BOUND BY THE TERMS AND CONDITION OF THIS AGREEMENT, PROMPTLY RETURN THIS PRODUCT UNOPENED AND YOUR MONEY WILL BE REFUNDED. THIS LICENSE AGREEMENT REPRESENTS THE ENTIRE AGREEMENT CONCERNING THE SOFTWARE BETWEEN YOU AND OLYMPUS CORPORATION. (”OLYMPUS”).

1. **LICENSE**. In consideration of payment of the Licensee fee, Olympus grants to you, as the End User, and you accept, a nonexclusive, nontransferable sublicense to use the Software for internal use, and not as a service bureau or for the benefit of a third party, in accordance with the terms hereof on one hardware system at a time. If you want to use the Software on more than one hardware system at a time you must obtain separate licenses for each system.

2. **OWNERSHIP OF THE SOFTWARE**. Olympus or its suppliers own and will retain all title, copyright, trademark and other proprietary rights in and to the Software. This sublicense is NOT a sale of the Software or a sale of any copy of the Software. This Agreement does not convey to you an interest in or to the Software but only a limited right of use the Software, as is provided herein, revocable in accordance with the terms of the Agreement. You agree as follows:

a. You may NOT make any copies of all or any part of the Software except for archival copies and reasonable backups of the Software as may be permitted by the United States Copyright Act.

b. You may NOT reverse compile, reverse assemble, reverse engineer, modify, incorporate in whole or in part in any other product or create derivative work based on all or any part of the Software

c. You may NOT remove any copyright, trademark, proprietary rights, disclaimer or warning notice included on or embedded in any part of the Software

d. You may NOT sell, license, sublicense or otherwise transfer the Software without the prior written consent of the Olympus to function as an Appointed Distributor with respect to the Software. Any Appointed Distributor shall ensure that the End User is not located in a state or territory for which export restrictions exist under US, UK or other applicable laws and shall assist Olympus as requested in documenting compliance.

3. **COPYRIGHT; RESTRICTED USE**. This Software is the property of Olympus or its suppliers and protected by United States copyright laws and international treaty provisions. Therefore, you must treat the Software like any other copyrighted material.

This product and documentation are provided on a RESTRICTED basis. Use, duplication, or disclosure by the US Government is subject to restrictions set forth in Subparagraphs (c) (1) and (2) of the Commercial Computer Software Restricted Rights at 48 CFR 52.227-19, as applicable.

4. **LIMITED WARRANTY**. Olympus warrants, for your benefit alone, for a period of sixty (60) days after receipt by you, that the Software will conform in all material respects to the user documentation furnished to you by Olympus. The sole responsibility of Olympus under this warranty will be, at its option, (1) to use reasonable efforts to correct documented errors in the Software that are reported to it within the forgoing warranty period or (2) to refund the License fee paid. Olympus and its suppliers do not warrant that the Software will be error free, nor that all program errors will be corrected. This limited warranty does not apply insofar as: (a) the Software is subjected to misuse, neglect, accident or exposure to environmental conditions beyond those specified by Olympus and its suppliers; (b) claims resulting from acts or omissions caused by persons other than Olympus or its suppliers or from products, material or software not provided by Olympus or its suppliers; or (c) you use Software that does not include all updates available from Olympus or its suppliers.

THIS IS THE ONLY WARRANTY GIVEN WITH THE SOFTWARE; OLYMPUS AND ITS SUPPLIERS MAKE NO OTHER WARRANTIES, EXPRESS, IMPLIED, OR ARISING BY CUSTOM OR TRADE USAGE, AND SPECIFICALLY DISCLAIM THE IMPLIED WARRANTIES OR NON-INFRINGEMENT, MERCHANTABILITY OR OF FITNESS FOR ANY PARTICULAR PURPOSE. THIS EXPRESS WARRANTY SHALL NOT BE ENLARGED OR OTHERWISE AFFECTED BY OLYMPUS'S RENDERING OF TECHNICAL OR OTHER ADVICE OF SERVICE IN CONNECTION WITH THE SOFTWARE. KEYMED AND ITS SUPPLIERS SHALL NOT BE HELD RESPONSIBLE FOR THE PERFORMANCE OF OR OUTPUT OBTAINED FROM THE SOFTWARE NOR ANY LIABILITY TO ANY PARTY ARISING OUT OF USE OF THE SOFTWARE OR USE OF ITEMS DESIGNED WITH THE SOFTWARE

5. **HIGH RISK USE UNAUTHORIZED**. The Software are not designed, manufactured, or intended for use in hazardous, medical, or other environments requiring fail-safe performance where the failure of the Software could lead directly to death, personal injury, or significant physical or environmental damage. Use of the Software in such a manner is not authorized.

6.LIMITATION OF LIABILITY. The cumulative liability of Olympus and its suppliers to you or any other party for an loss of damages resulting from any claims, demands, or actions arising out or in connection with the Software, or arising out of in connection with or relating to this License Agreement shall not exceed the License fee paid to Olympus by you for the Software. In no event shall Olympus or its suppliers be liable for any indirect, incidental, special, exemplary, or consequential damages (including any damages resulting from loss of use, loss of data, loss of profits or loss of business), or lost profits, even if Olympus has been advised of the possibility of such damages.

7. **MISCELLANEOUS**. This Agreement shall be construed and governed in accordance with the laws of England, and shall be construed as an instrument under seal. Should any term of this Agreement be declared void or unenforceable by any court or competent jurisdiction, such declaration shall have no effect on the remaining terms hereof. The failure of either party to enforce any rights granted hereunder or take action against the other party in the event of any breach hereunder shall not be deemed a waiver by that party as to subsequent enforcement of rights or subsequent actions in the event of future breaches. The provisions of this Agreement may be enforced not only by Olympus, but by its suppliers, each of which is an intended third party beneficiary of this Agreement.

Chapter 1 Introduction

The Olympus *i-SPEED* is a self-contained high speed video camera. This means that it contains all the functionality required to obtain high speed video and does not require the presence of a PC. The camera has been designed to be used as follows:

Controller Display Unit

The Controller Display Unit (CDU) is supplied as standard with the Olympus *i-SPEED* . This product displays the image from the camera in real-time and permits the most flexible use of the camera, by using a series of buttons around the outside of the screen. The bottom seven buttons are used as “soft keys”, that is the function of each button is dependant on the text written above it on the screen. The four buttons on the right hand side have dedicated functions and these are Text, Back, Up and Down. The menu system has been specially constructed to take maximum advantage of this layout. CDU operation of the camera is described in detail in Chapter 6 of this manual.

Chapter 2 Checking the Package Contents

Remove the transit sleeve and open the *i-SPEED* system case. Match all items in the case with the items shown below. If any item is missing or damaged contact Olympus.

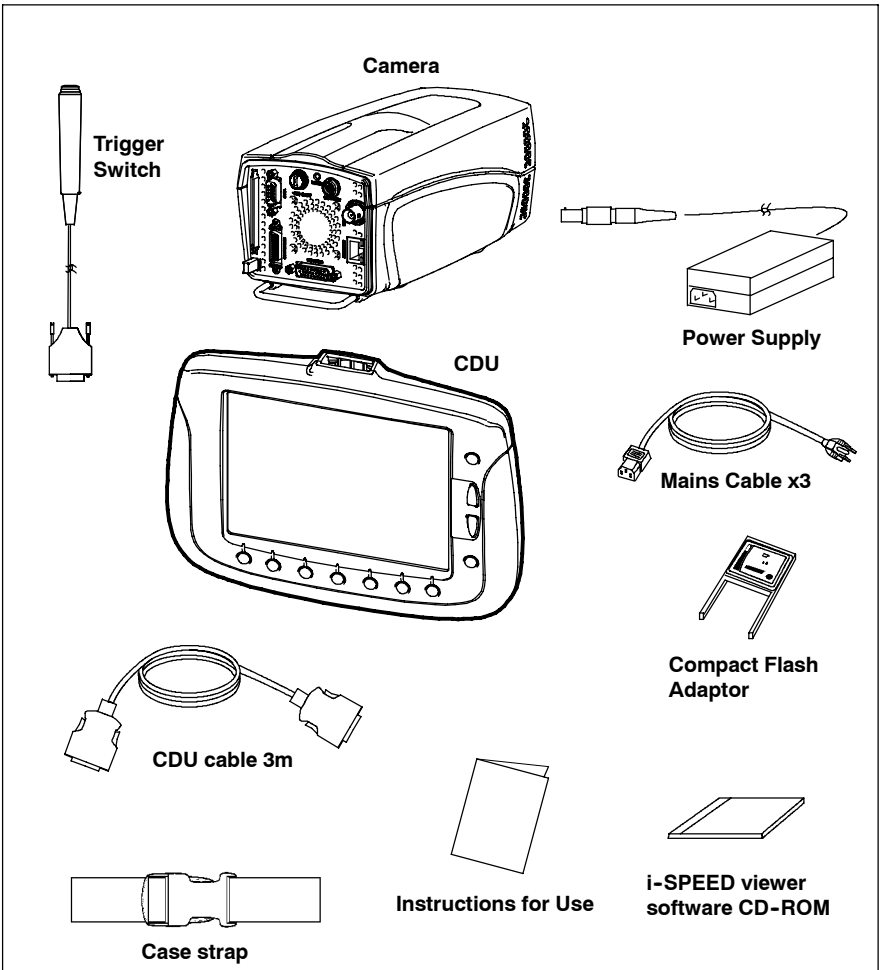

Note: The standard set does not include a compact flash card

Chapter 3 Nomenclature and Functions

3.1 Camera

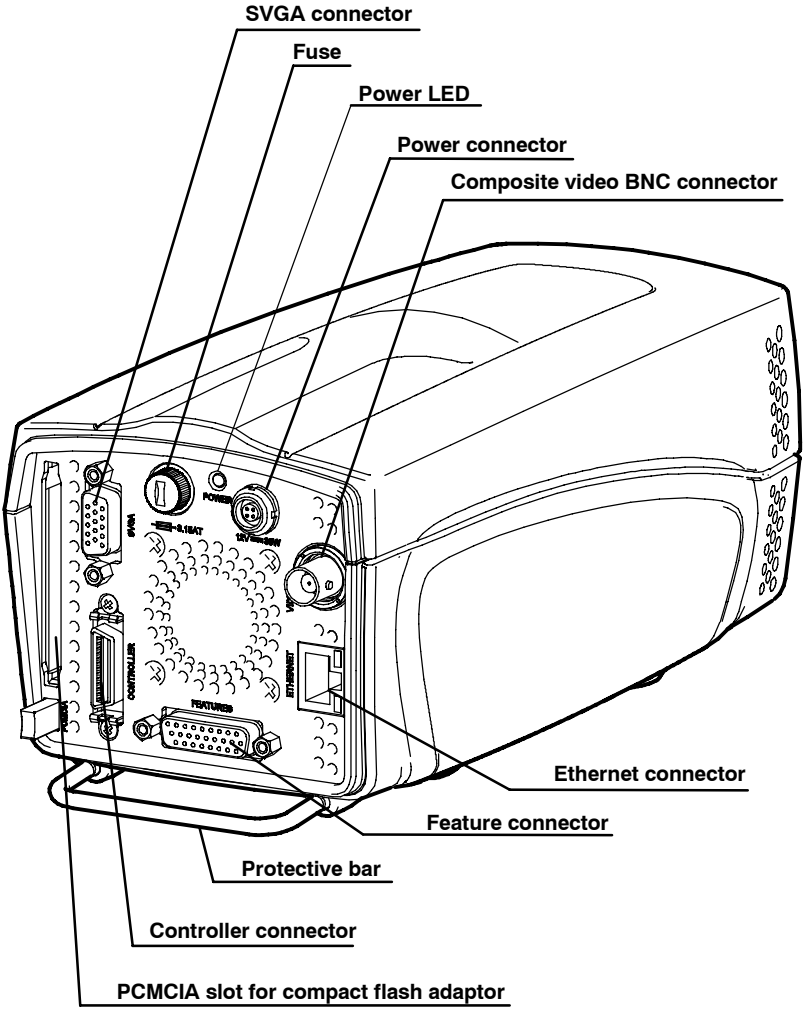

1. **Power Connector**
   The rear panel Power connector is used to take power into the camera, nominally 12V DC. This power is used to operate the camera, but is also used to operate the CDU. The power input is protected against reverse polarity connection and this will normally result in a blown fuse.

2. **Power LED**
   The power LED will illuminate when 12V is applied and the fuse is operating correctly.

3. **Fuse**
   The fuse is replaceable by the user and is accessed by unscrewing the fuse holder. Care must be taken to replace the fuse with one of the correct size, type and rating.

4. **Composite Video BNC Connector**
   This connector provides an industry standard PAL or NTSC composite colour video to a video monitor unit. BNC is an industry standard connection for this type of signal. The video available from the connector may be switched between NTSC and PAL via the menu system in the CDU.

   Composite video signals are designed to be driven into a terminated connector, so care must be taken to ensure that the last piece of equipment in the BNC cable chain is set to terminate with 75 Ohms.

5. **Controller Connector**
   This connector is used to connect the CDU to the camera. It carries power from the camera to the CDU, video from the camera to the CDU and receives button press information from the CDU.

   Although this connector conforms to the LVDS industry standard, it is recommended that only cables supplied by Olympus are used and it is imperative that no equipment other than the CDU is attached to this connector.

6. Ethernet Connector

Used for software updates if newer software becomes available.

7. SVGA Connector

This connector provides a SVGA signal which contains the video image and overlay graphics. This signal is a copy of the CDU image. The output standard is the 60Hz SVGA PC video signal and the connector conforms to the PC video 15 pin D-sub standard. As a result, this signal may be fed directly to a PC monitor, (CRT or LCD) and provides the best quality live analogue video signal available from the camera.

8. PCMCIA Slot

The camera is able to operate a PCMCIA flash memory. The standard used is the ATA FLASH standard and the card may be either 3V3 or 5V. It is also possible to use a Compact Flash card with the supplied PCMCIA adapter and this is recommended if larger memory sizes are required. Once the card is inserted it must be pressed firmly in place and may be ejected by pressing the button at the bottom of the slot. It is not necessary to switch power on and off as the card is inserted and removed, but care must be taken not to remove the card while writing, deleting or formatting is in progress.

9. Feature Connector

Trigger Input / **Trigger Switch**: This connector (and the supplied trigger switch if required) are used to trigger the camera while recording is in progress. Further details are provided in Chapter 7 "Understanding the Olympus *i-SPEED*".

When the trigger is set to 0%, the trigger counter is set to the length of the memory, so that the trigger point appears at the beginning (0%) of the final video clip. A setting of 100% will cause the recording to stop immediately, placing the trigger event at the end of the video clip.

The signal is TTL level and the user may select rising edge or falling edge trigger options.

The trigger input contains a "pull-up" resistor to enable the supplied trigger switch to be used without further electronics. It should be noted that the trigger switch provides a falling edge. In practice, the trigger switch also produces a rising edge because of switch bounce, but this cannot be guaranteed.

10. Cooling Holes

The rear panel has a number of cooling holes, and more are located on the sides of the casework at the front of the unit. The outer holes on the rear panel and the holes at the front of the unit are air inlets and the holes in a circular pattern on the rear are air outlets. The primary reason for including forced air cooling has been to eliminate localised hot spots within the electronics and care should be taken to ensure that the cooling holes are kept clear at all times as described in Chapter 8 "Maintenance".

11. Back Focus Control

It is sometimes necessary to adjust the distance between the C-mount face and the image sensor to accommodate lenses from different manufacturers and lenses with different optical tolerances. The Olympus *i-SPEED* has a back focus assembly located in the front of the unit to permit this adjustment.

To adjust the back focus, screw a C-mount lens into the C-mount in the normal way. Turn the locking ring anticlockwise (when viewed from the front) to unlock the C-mount thread ring then rotate the lens to adjust the back focus as required - a series of 'click' positions will be felt. When complete, the adjustment should be left in one of these 'click' positions and the locking ring rotated clockwise to lock the C-mount thread ring in position.

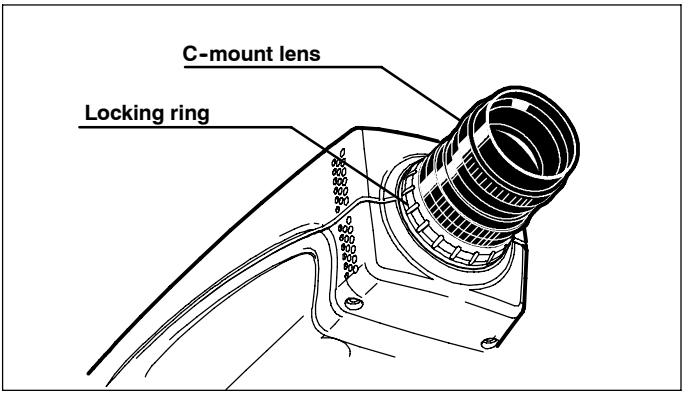

As a guide, the correct setting of back focus is obtained by pointing the camera at an object at a known distance from the lens, preferably an "infinite" distance. The scale on the lens is then used to set the focus ring to this distance. The back focus is then adjusted to obtain the best image.

12. Mounting Holes

The base of the unit is fitted with 5 standard mounting holes. It is recommended that the central hole is used for mounting the camera (e.g. to a tripod) and the other holes may then be used to mount light-weight accessories to the camera.

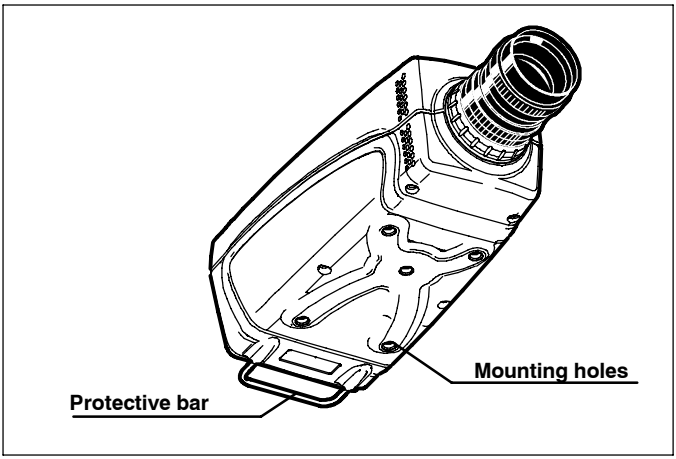

13. **Protective Bar**

The back of the unit is fitted with a protective bar. The purpose of this is to protect the connectors from damage if the unit is placed on a shelf and pushed back against a wall. In spite of this, the bar may also be used as a handle to carry the camera or to support light-weight items when the camera is mounted on a tripod.

14. **Protective Glass**

The image sensor is located at the front of the camera inside the C-mount aperture. A protective glass is fitted to this aperture to shield the sensor from dust and damage. It is recommended that the glass is kept clean as detailed in Chapter 8 "Maintenance".

15. **Battery Memory**

The Olympus *i-SPEED* contains a battery powered clock and memory. This is used to keep track of the time and date while the camera is switched off. The memory is also used to store some of the user controls, such as the TV monitor standard and the language setting. The battery is a non-replaceable lithium cell which should last for approximately 10 years. In the event of battery failure, default values will be used at each switch-on.

3.2 Power Supply/Mains cable

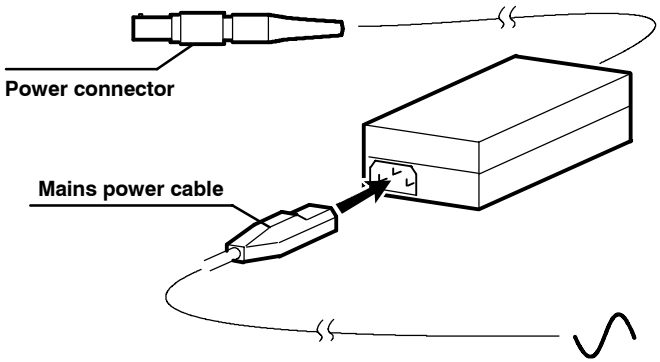

1. **Power cable**
   The 12VDC Power supply is supplied with the appropriate AC mains power cable. The power supply unit MUST be earthed and it is recommended that the mains power cable supplied is used to maintain standards compliance.

2. **Power connector**
   Connects to the ‘power’ socket of the camera and provides power to the camera and its controller unit.

CAUTION The user must ensure that only the power supply unit supplied with the Olympus *i-SPEED* is used and that this unit is only used to power the camera.

The memory in the camera will be erased if power is lost.

3.3 Controller Display Unit (CDU)

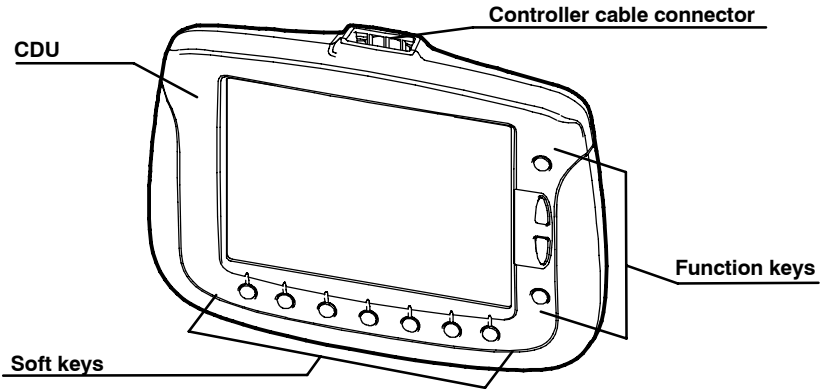

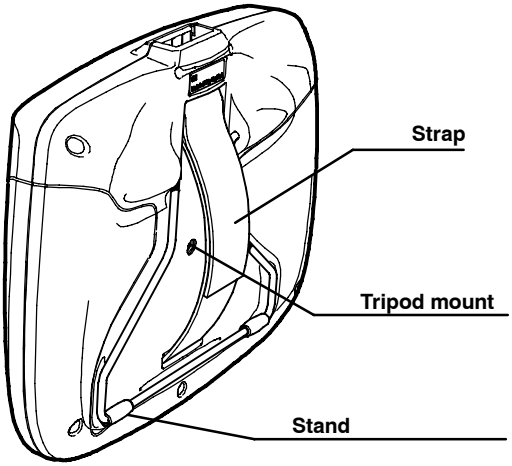

CAUTION The CDU is not High-G rated. The CDU can be detached and reattached without switching the camera off.

1. **CDU**
   The CDU displays the image from the camera in real-time and permits the most flexible use of the camera, by using a series of buttons around the outside of the screen. The CDU is connected to the camera's Controller connector via a 3m controller cable (a 10m cable is available as an optional accessory). The CDU takes power and video from the camera and requires no batteries or further connections.

   LCD Panel, Viewing Angle: At the time of design and writing this manual, the LCD panel used in the CDU is the best available LCD panel of this size and resolution. Even this market leading panel, however, has a restricted viewing angle in the vertical direction and the user is advised to experiment with the CDU to find the optimum angle at which to view the image.

   Protective Screen: Although the CDU LCD screen is protected by a tough plastic sheet, it is still recommended that care is exercised when handling this unit. It is also important to keep this screen clean to preserve its anti-glare properties and this is detailed in Chapter 8 "Maintenance".

2. **Soft keys**
   The bottom seven buttons on the CDU are used as "soft keys", that is the function of each button is dependant on the text written above to it on the screen.

3. **Function keys**
   The four buttons on the right hand side of the CDU are dedicated function buttons, these are Text, Back, Up and Down. The menu system has been specially constructed to take maximum advantage of this layout.

4. **Stand**
   The CDU is equipped with a stand which may be set to a number of 'click-stop' positions to allow standing on a flat surface at various angles or hanging from a convenient hook. The stand may also be folded flat for storage or when the strap is used.

5. **Strap**
The back of CDU has an adjustable strap which may be used to allow the unit to be conveniently held with a single hand.

6. **Tripod Mount**
The CDU contains a tripod mounting hole with the industry standard thread and is located under the strap.

CAUTION The CDU must not be connected to any equipment other than the Olympus *i-SPEED* camera, otherwise equipment damage will occur.

NOTE To maintain standards compliance, it is recommended that only cables supplied by Olympus are used.

Chapter 4 System Connection

Refer to the diagram shown below and connect the system.

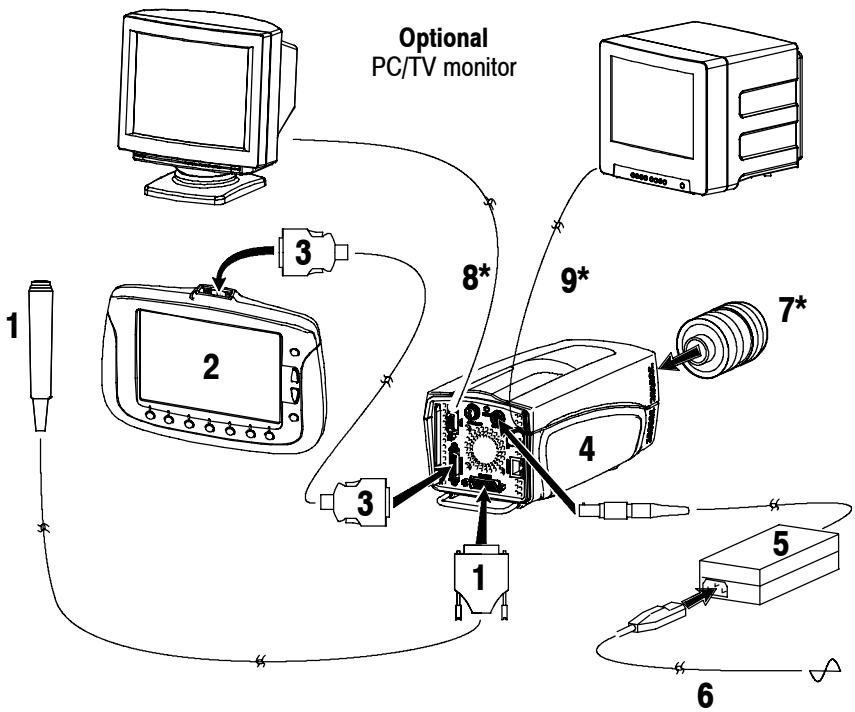

Key

1	Trigger switch	6	Mains power cable
2	CDU (Controller Display Unit)	7	C-Mount lens*
3	Controller cable	8	VGA cable *
4	Camera	9	Composite video BNC cable*
5	Power supply unit (PSU)		

*not supplied in the standard set

Chapter 5 Getting Started

This section provides a functional description followed by the basic steps required to start using the *i-SPEED* camera system.

5.1 Functional Description

Assuming the system has been connected as described in Chapter 4, the typical sequence of events is as follows:

After the sensor has been calibrated, the frame speed and shutter settings are chosen, the lighting and lens are adjusted appropriately and the camera is placed in record mode.

The camera then takes video at high frame rates and stores it in the built-in memory. This memory is configured in a circle so that, once the memory is full, each new frame replaces the oldest stored frame. In this way, the camera keeps a rolling history of the scene it views and this process can continue indefinitely. Once the desired event has occurred, the camera is stopped or triggered.

During the entire set-up and record process, the CDU and any monitor attached will display the live image in full colour and in real time.

Once the required video clip is stored in memory, it may be viewed by using the player function. In this mode, video may be played forwards or backwards at a range of speeds. A convenient bookmark system is provided for easy navigation between sections of interest.

The memory in the camera will be erased without power, so if it is necessary to preserve the captured video after power off, it may recorded onto a PCMCIA memory card, which is inserted into the card slot provided. The internal memory is much bigger than any card currently available, so only a subsection of video may be stored. High speed video clips generally contain a large amount of “dead time” and a relatively small amount of useful motion, in recognition of this, the Olympus *i-SPEED* has a clip select function which allows a precise choice of the video to be saved.

5.2 Controlling the camera with the CDU

This section describes the basic steps required to start using the *i-SPEED* camera system with the CDU. Additional information regarding functionality of the CDU can be found in Chapter 6.

1. Connect the system as described in Chapter 4, then connect the mains power cable to a suitable AC wall outlet and switch the power ON – the *i-SPEED* splash screen is displayed on the CDU.

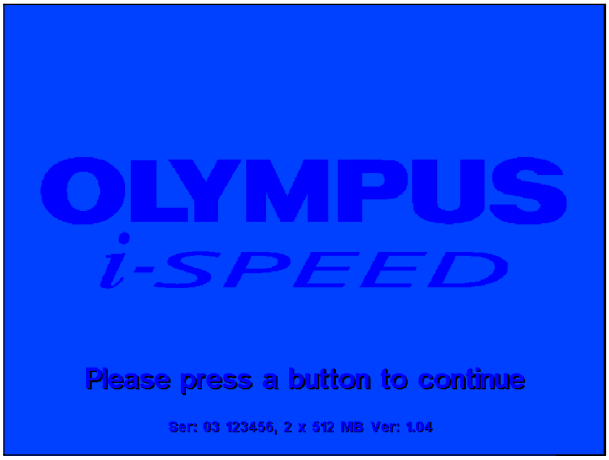

2. Press any key, a live video image is displayed on the CDU.

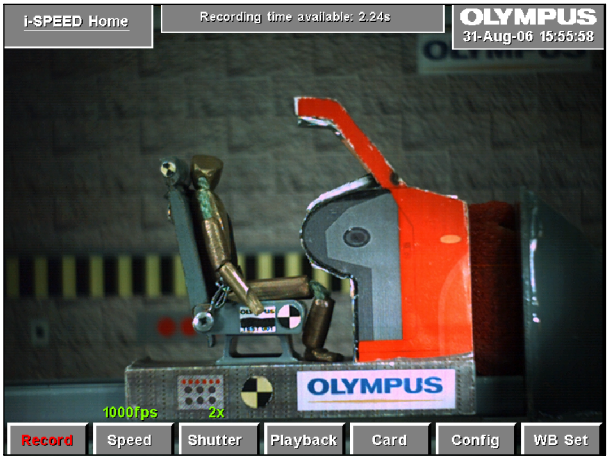

3. Once the camera has been switched on, the image will contain fixed noise. This must be removed by pressing “Config” then “Calibrate sensor”. Immediately the “Calibrate sensor” button is pressed, the lens must be completely covered to provide total darkness to the sensor for the duration of the process. An on-screen message will show the progress of the calibration process. Press “Back” to return to the *i-SPEED* Home screen.

4. Adjust the lens focus and iris as required to achieve a sharp, bright image.

5. Depress the Speed and Shutter buttons to select the desired frame speed (def: 60fps) and shutter speed (def: x1). You may need to re-adjust the lens focus and iris to achieve a sharp, bright image.

6. Depress the Record button, a camera icon is displayed and the camera records video into its circular buffer until the Stop button is depressed or the trigger button is pressed.

NOTE If the trigger is used, recording will stop after a delay. This delay depends on the trigger position setting and frame speed.

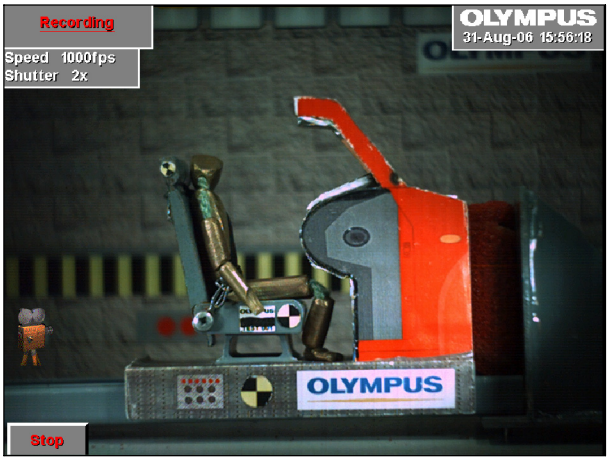

When recording has stopped, whether by trigger or STOP button, the camera will present the Player menu and display the first recorded image in the memory.

7. Player controls are: jump back, play backwards, play forwards, jump forward (to bookmark). Each button when pressed changes to a Stop button.

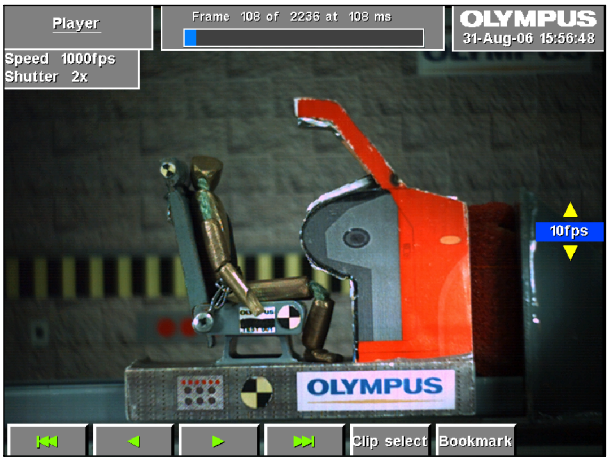

The Bookmark control is used to set bookmarks at points of interest and are displayed as white vertical lines in the progress bar at the top of the screen. When the Trigger is used, an automatic bookmark is displayed as a Red vertical line.

8. Use the up/down buttons on the right hand side of the CDU to adjust playback speed.

9. If the video clip is to be saved, insert a PCMCIA memory card into PCMCIA slot in the camera.

10. Use the player controls to navigate to the desired start position. Press Clip select and press Clip start. Press Back to return to the player, navigate to the desired end position. Press Clip select and select Clip end.

    Frame and memory status is displayed top right.

    NOTE Note that Clip select will not be available until a card is inserted.

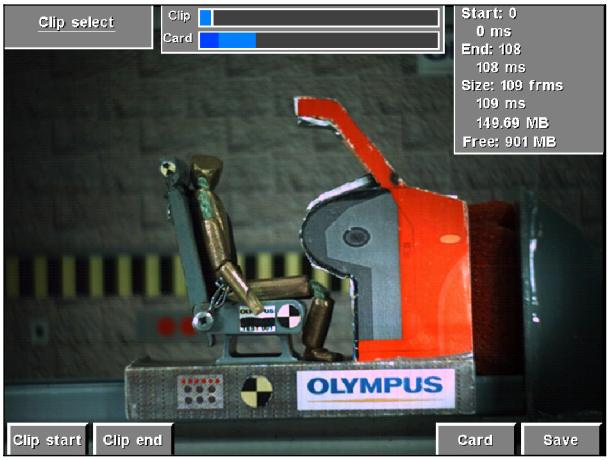

11. Depress Save.

12. Depress BACK as required to return to the Home menu.

Chapter 6 Embedded Software Reference (CDU)

Introduction

This reference section describes the camera's embedded software and its user interface from the viewpoint of the CDU. In this section, items which are printed *like this* signify the name of a sub menu, controls are described whenever they appear in a menu.

Operation of the CDU menus

To navigate through the menu system, the button nearest the desired selection is pressed.

When a control is selected, the desired value may be chosen by using the ▲ and ▼ buttons on the right hand side of the screen. Repeatedly pressing or to press and hold the control button will cycle through the available values. The current value is displayed above the control button and also next to the ▲ ▼ buttons.

To return to a higher menu, the Back button is pressed. If there is a requirement for a text free screen, the Text button is used to cycle the on-screen text through full, time/date only and off options.

6.1 Menu Screens

1. OLYMPUS *i-SPEED* Splash Screen

   This screen is displayed while the camera starts up and configures the internal software. It contains data on the memory configuration of the camera, the serial number and the software version number. To exit this screen, the user must press a button on the CDU.

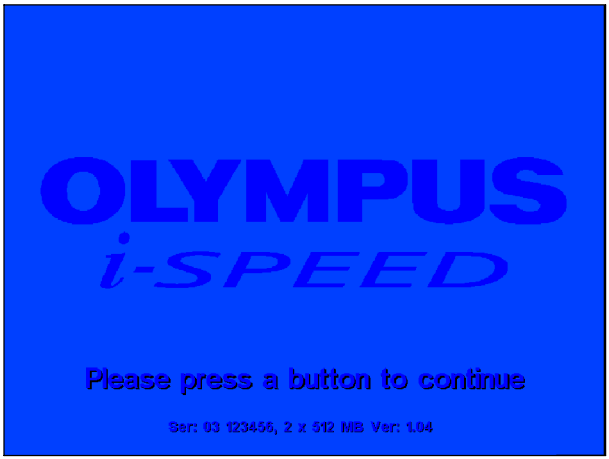

2. *i-SPEED* Home Menu

This is the top level or home screen of the menu system. It may be accessed by pressing the Back button repeatedly from any position in the menu system.

Access: *i-SPEED* Home

Options: *Record* Speed Shutter *Playback* *Card* *Config* WB Set

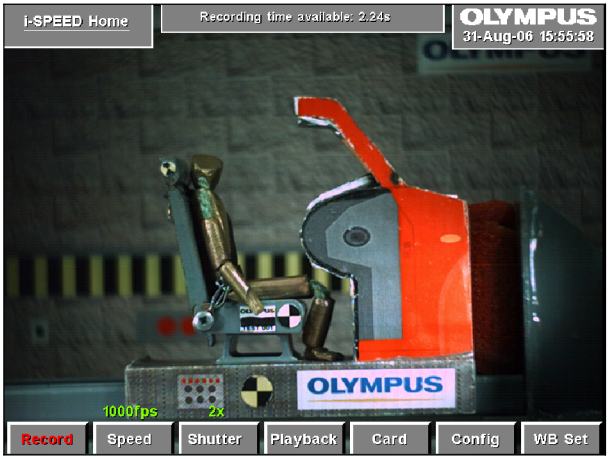

- The CDU will display the live image

Speed Control

This control allows the user to set the frame speed of the camera. The lowest speed available is 60 frames per second as this is almost equal to the SVGA display specification. The maximum speed is fixed to 1,000fps.

As described in Chapter 7 “Understanding the Olympus *i-SPEED*”, the user will normally need to open the iris of the lens and/or add more light as the speed is increased.

Shutter Control

It is sometimes desirable to reduce the time during which the sensor gathers light (called “exposure time”, “integration time” or “shutter time”) in order to reduce motion blur and “freeze” the motion in each frame. The default shutter time is equal to the frame time, but this may be reduced by this control. The shutter time is measured as the ratio between frame time and shutter time, e.g. x10 means that the shutter is open for 1/10 of the frame period. The shutter period may range from the frame period (x1) to 1/200 of the frame period (x200).

The user should note that as the shutter ratio is increased, the camera will require more light.

WB Set Control

This control activates the automatic white balance function. Before pressing this control, the user must place a pure white reference (sheet of paper etc.) in front of the camera, completely filling the field of view. This must not be removed until the white balance is complete. An on screen message shows the status of the white balance process.

Please refer to Chapter 7 “Understanding the Olympus *i-SPEED*” for a further description.

NOTE Once this is set, the white balance setting is stored in the camera’s internal memory.

3. Recording Menu

When this menu is displayed, the Olympus *i-SPEED* is recording video into its circular buffer. The record action is confirmed by the presence of a small animated camera icon. When a trigger signal is received and the camera is working through the length of its trigger counter, the animation is supplemented by a 'stop watch' icon.

When recording has stopped, whether by the trigger or the STOP control, the camera will automatically present the Playback Menu and thereby display the first recorded image in the memory.

Access: *i-SPEED* Home ➧ Record

Options: STOP

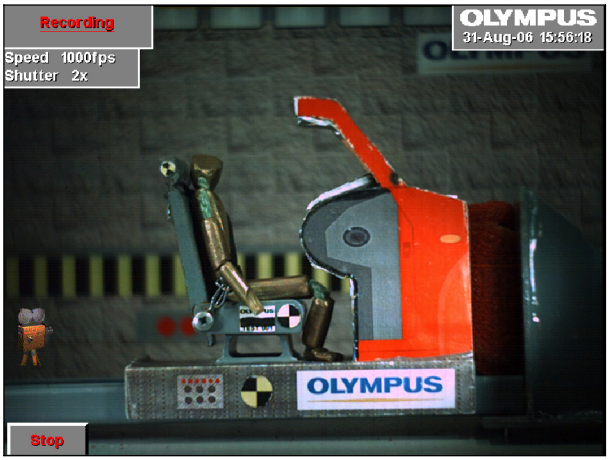

- The CDU will display the live image

STOP Control

This control will cause the camera to stop recording immediately, regardless of the setting of the trigger position.

4. Player Menu

This specialised screen allows the user to play back and interact with the video stored in the circular buffer memory.

Access: *i-SPEED* Home ➧ Playback

Options: Jump back Reverse play Forward play Jump forward
Clip select Bookmark

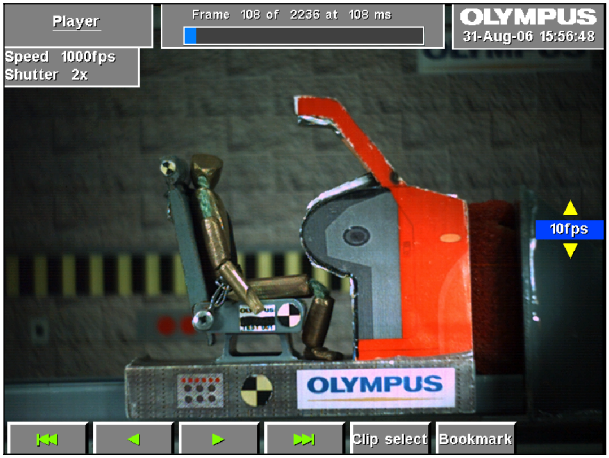

- The CDU will display the playback images required by the player controls

Player Controls

The controls should be familiar to most users: jump back, play backwards, play forwards, jump forward.

The jump controls will cause the player to immediately move either to the next bookmark or to the beginning/end of the memory.

The speed of playback is controlled by the ▲▼ buttons on the right hand side of the CDU. The chosen playback speed is indicated in a label next to these buttons. This may be used to “Fast forward” or “Rewind” the video.

Bookmark Control

This control is used to set bookmarks at points of interest. Pressing the button when already on a marked frame will remove the bookmark. Bookmarks are displayed in the progress bar at the top of the screen. For the convenience of the user, the trigger frame is automatically given its own bookmark, and this is coloured differently for clarity.

On Screen Information

The player provides a progress bar at the top of the screen to indicate the relative position within the circular buffer of the currently displayed frame. This bar is also used to display bookmarks. In the same display panel as the progress bar is a numerical description of the frame number, the total number of frames in memory and the time of the current frame relative to the start of the memory.

5. Card Management Menu

This menu makes available the items which relate to the management of the PCMCIA removable memory card, both ATA and Compact FLASH.

The screen includes a list of the files on the card and one of these will be highlighted by a selection bar.

Automatically appears after saving a file

Access: *i-SPEED* Home ➧ Card
i-SPEED Home ➧ Player ➧ Clip select ➧ Card

Options: Delete Format

The CDU will display the card directory.

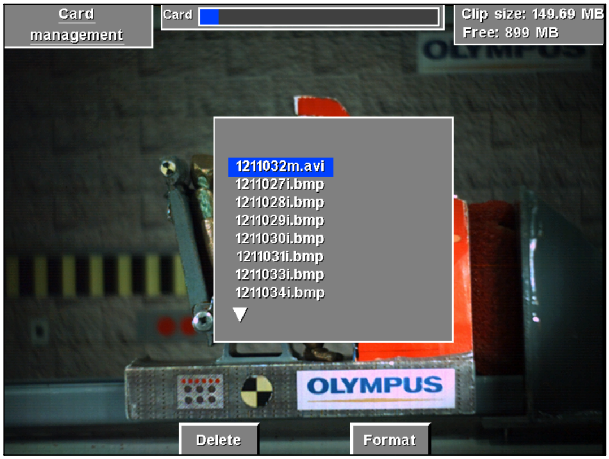

Delete Control

This control is used to delete the selected file from the card. The user is protected from error by a confirmation question.

Format Control

The user is able to format the card. This will delete all the data on the card and also prepare a new card for its first use. The user is protected from error by a confirmation question.

6. Config Menu

This menu makes available all the items which relate to the configuration of the camera.

Access: *i-SPEED* Home ➧ Config Menu

Options: *Time/Date* Language TV Monitor Calibrate Sensor Trigger edge Trigger pos

Language Control

This control permits the user to set the language in which the menus are displayed. The language of the information tiles and control value display is not changed.

TV Monitor Control

The composite video output connector (BNC) is able to provide either NTSC or PAL and this selection is made by this control.

Calibrate Sensor Control

In common with all CMOS sensor chips, the Olympus *i-SPEED* sensor requires a calibration system to remove fixed pattern noise. The Olympus *i-SPEED* provides an off-chip calibration system. To calibrate the sensor, the user must press the “Calibrate” button and then completely cover the lens to exclude all light. An on-screen message allows the user a brief time to do this. The calibration then occurs and the message is removed once this is complete. Further discussion may be found in Chapter 7 “Understanding the Olympus *i-SPEED*”.

Trigger Edge Control

This control sets the trigger detection system to wait for a rising edge or a falling edge on the trigger input connection.

Trigger Position Control

This control sets the length of the trigger delay, so that the trigger point will appear at a user-settable position in the recorded video clip. With the trigger position at 0%, the trigger delay is equal to the length of the circular buffer and the trigger point will appear at the beginning of the video clip. With the trigger position at 100%, the trigger counter is set to zero and the recording will stop immediately the trigger is activated, thus the trigger point will appear at the end of the video clip. There are a number of options available in between 0% and 100%.

7. Clip Select Menu

This menu makes available all the items which relate to selecting the video clip to be saved on the PCMCIA card.

Access: *i-SPEED* Home ➧ Playback ➧ Clip select

Options: Clip start Clip end *Card* Save

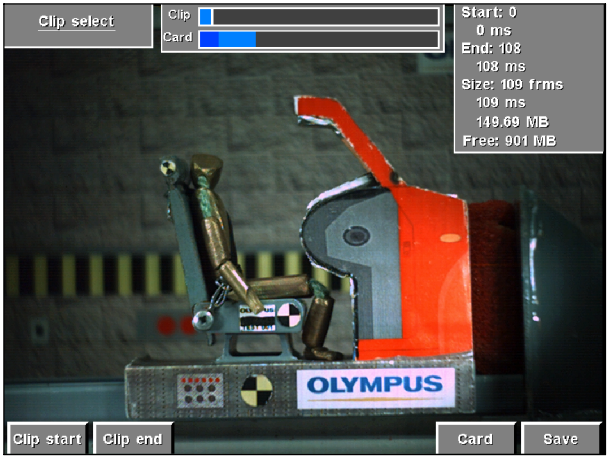

- The CDU will display the playback images required by the clip select controls

Player

The user may access the player by pressing the “Back” button.

Clip Start and Clip End Controls

The player controls are used to locate the start and end of the desired video clip and the Clip Start and Clip End controls are used to mark the chosen frames.

Save Control

If the start and end frames are selected as the same frame, the save control will cause the camera to save a single bitmap (BMP) image to the card. If more than one frame is chosen, the camera will save a movie (AVI) file to the card.

On Screen Information

The Clip Select menu provides a progress bar to indicate the position in the buffer memory of the currently displayed frame as well as the start and end frame markers. This bar is also used to display bookmarks.

In the same display panel as the progress bar is a graphical representation of the available memory in the card, the total memory in the card and the quantity of memory required for the currently selected clip.

In a separate display panel is a numerical description of start frame number relative to the start of the camera's memory, the number of frames selected, the size of the chosen clip and the available free memory in the card.

8. Time / Date Setting Menu

This menu permits the setting of the time and date of the on-board clock of the camera.

When the appropriate time and date have been set, the OK button should be pressed.

Access: *i-SPEED* Home ➧ Config ➧ Time/Date

Options: Year Month Day Hour Minute Second OK

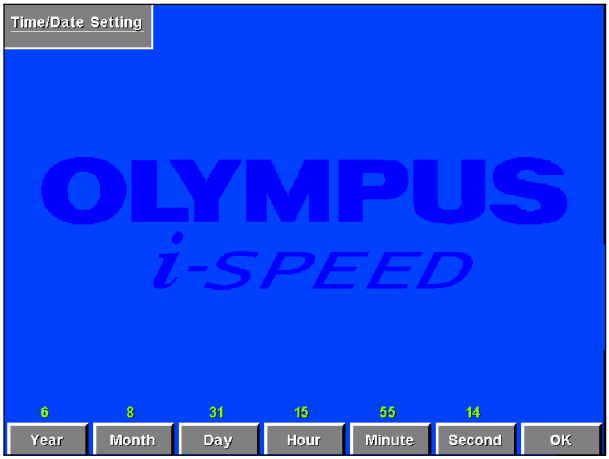

- The CDU will display the splash screen logo

OK Control

This control confirms the numerical entry just made and also returns to the previous menu.

Chapter 7 Understanding the Olympus i-SPEED

The Olympus *i-SPEED* has been designed with ease of use in mind and all the functions of the camera are accessed via clear and descriptive menus. Every effort has been made to ensure that the menus are intuitive.

High speed video, however is a complex subject in itself and several of the functions of the Olympus *i-SPEED* are necessarily complex. Reading the following section will provide the user with sufficient knowledge of these areas to begin to understand the menus themselves. A detailed description of the menus is given earlier.

Speed

The camera contains electronic memory to hold the video images as they are captured and this has a specific size. The memory is therefore capable of holding a fixed number of full resolution images and there is a clearly defined maximum recording time at 1,000fps.

If the frame rate is reduced below 1,000fps, the available record time will increase because the images are arriving less frequently.

There is a further trade-off associated with frame speed and this is discussed below.

Shutter, Speed, Sensitivity

The sensor operates by capturing light, converting it to an electronic facsimile of the optical image and supplying the memory with the image while the cycle begins to repeat. The period during which light is captured is called the “integration time”, “exposure time” or “shutter time”. The shutter time is normally equal to the maximum time available during the frame, called the “frame period”.

If the scene contains a very fast moving object, the object may move an appreciable distance during the frame period and this will cause the object to appear blurred. This “motion blur” is sometimes undesirable, so the Olympus *i-SPEED* is able to reduce the shutter time to a fraction of the frame period and this causes the object to be “frozen” in each frame. The shutter time is usually measured as the ratio between frame period and shutter time, e.g. 10x means that the shutter is open for 1/10 of the frame period.

Reducing the shutter time however, reduces the amount of time the camera spends gathering light and the image will become dimmer. For this reason, increasing the shutter setting will normally require the addition of extra light to the scene.

A similar effect is found when the frame speed is increased. The available shutter time is reduced because the frame period is reduced – the faster the frames are taken, the less time is spent on each one. As a result of this, increasing frame speed will normally require the addition of extra light to the scene.

Internal Memory, Circular buffer

When in record mode, the camera continuously stores frames in its internal memory. That memory is configured in a circle so that, once the memory is full, each new frame replaces the oldest stored frame. In this way, the camera keeps a rolling history of the scene it views and this process can continue indefinitely. This configuration of the memory is called a “circular buffer”.

Once the desired event has occurred, the camera may be stopped by pressing a menu button or raising a trigger event as discussed below.

Trigger

As mentioned above, the Olympus *i-SPEED* records video in a circular buffer and can do so indefinitely. At some point, however, it is necessary to stop the recording process in order to preserve the data in the memory.

The method of stopping the camera is highly important as it is this which guarantees the capture of the event in question. There are two methods of stopping the Olympus *i-SPEED* . The first is a button press in the menu system and this immediately stops the record process, so that the memory contains the history prior to the button press.

The second method is to use an external electrical trigger, which causes the camera to stop after a user-settable delay. By permitting the camera to record for a brief time after the trigger, some history before the trigger and also some future after the trigger are preserved in the memory. In this way, the trigger may occur in the middle of the event of interest and yet the camera can still capture the whole event.

The delay between the trigger event and the cessation of recording is controlled by a frame counter known as the trigger counter. The length of this count is controlled by the menu system and is expressed as a percentage of the total available record time of the camera’s memory.

The counter value is described from the viewpoint of the final recorded video clip, so that a setting of 0% sets the counter to delay for the entire length of the circular buffer. In this way, the

trigger event will appear at the beginning of the video clip. Similarly, a setting of 100% will cause the camera to stop immediately a trigger is received, and this will place the trigger event at the end of the recorded video clip.

Since the trigger is an electrical signal, the Olympus *i-SPEED* may be set to wait for either the rising or the falling edge of the trigger pulse.

Sensor, FPN, FPN Calibration

The image sensor used in the Olympus *i-SPEED* camera is a CMOS chip and, like all CMOS imagers, it has the property of introducing fixed pattern noise (FPN) onto the image. Most HSVC manufacturers provide some form of correction to remove the FPN.

FPN will give the image a gritty appearance, almost as though the picture has been printed onto sandpaper, and may also produce thin vertical stripes.

To calibrate the sensor, the user must press the “Calibrate” button and then completely cover the lens to exclude all light. An on-screen message allows the user a brief time to do this. The calibration then occurs and the message is removed once this is complete.

The control to manually trigger the calibration is found in the config menu.

White Balance

The human eye automatically adjusts its colour processing in order to make white objects look “white” in spite of varying ambient lighting colour. When viewing video on a monitor, however, the eye judges white based on the ambient around the monitor, not on the ambient around the camera. For this reason, a colour camera must also adjust its processing to compensate for the ambient lighting and configure its output to produce the electronic version of pure white (red = green = blue) when a white object is viewed. In this way, the camera can render white objects as white on the monitor, in spite of ambient light coloration. This function is called white balance.

The Olympus *i-SPEED* provides an automatic white balance which relies on the user placing a pure white reference (sheet of paper etc.) in front of the camera, completely filling the field of view and then pressing the WB Set button. When this is done, the camera will sample the reference and reconfigure its processing electronics to render this as pure white. The reference must not be removed until the white balance is complete, so an on screen message shows the status of the white balance process.

Lighting

The Olympus *i-SPEED* has been designed to remove most of the difficulty associated with taking high speed video shots, but two areas of critical importance still remain, lenses and lighting. In many cases, most of the time taken when working with the Olympus *i-SPEED* will be used in setting up the lighting, framing the shot and choosing the correct lens.

Earlier sections of this document have described how the shutter time and speed setting of the camera dramatically increase the requirement for light. The result of this is that most high speed video applications require a large amount of lighting and this is a common theme in the high speed video industry. As a rough guide, most indoor shots require 500 to 2,000 watts of additional lighting. This is traditionally provided by shining a few high power spot lights on the target scene but, for smaller targets, the Olympus range of industrial light sources and light guides provide ideal illumination.

Simply providing a large wattage of light is not suitable for most applications. It is usually necessary to carefully focus and target the light, so general purpose floodlights are not normally useful in HSV work.

An illustration is given from the experience of the *i-SPEED* development team. A car parts manufacturer wished to view a rapid movement in the mechanism of a prototype seatbelt reel. The scene was illuminated with several 1,000 watt garden floodlights, but this was sufficient for only a few hundred frames per second. The lighting was removed and replaced by a single specialised 500 watt spotlight and this permitted operation at 1,000 fps. When faster operation was required, the spotlight was augmented by an Olympus Industrial light source and liquid light guide and this increased the operating speed to 4,000fps.

This example is included to show that the quantity of light is significantly less important than the concentration of light. Olympus representatives are able to supply specialised lighting which has been selected to be suitable for most high speed video applications.

View Finder

In contrast with some other manufacturer's products, the Olympus *i-SPEED* camera presents the live image on the CDU or monitor screen at all possible times. Some menus do require the image to be obscured and the splash screen logo is used for this purpose. Also, the playback screen is used to display the contents of the memory buffer, rather than a live image. During the live view and the record process, however, the screen will display a live, colour, real time image, updated at 60 frames per second.

Lenses

The choice of lens can make a dramatic difference to the video images obtained.

Choosing the lens must begin with the focal length, which is expressed in mm. A lens with a large focal length would normally be chosen when a small area is to be viewed or the camera is to be a long distance away from the scene, because a longer focal length means a greater magnification. This type of lens has the disadvantage of reducing the apparent distance between objects which are arranged axially with the camera. This is called foreshortening. Lenses with long focal lengths also tend to have a smaller maximum iris setting (higher f number) and are dimmer than short focal length lenses.

A lens with a short focal length is chosen when a wide area is to be viewed, or the camera is to be placed near to the scene. Lenses with a very short focal length have the disadvantage of distorting the perspective of the image and this is called barrel distortion.

Normal lenses have a controllable iris or aperture. The iris controls the amount of light available to the camera. The higher the f number, the less light the lens transmits. Increasing the number by 1.4 times (e.g. from f/4 to f/5.6), is called 1 stop and halves the light throughput.

There is a secondary effect of reducing the iris (increasing the f number) and this is an increase in the depth of field. This means that the lens is more able to focus on close and distant objects simultaneously, so a small iris setting is advantageous.

This is in conflict with the normal HSV requirement for as much light as possible, especially at high speeds and fast shutter times. Probably the greatest art in lens set-up is striking a balance between getting all objects in the scene into focus and having a bright enough image. It is advisable in general to operate with a smaller iris (higher f number) and add more light.

It is not possible to specify an ideal lens, because photography is dependant on the object being photographed, but an “average” lens for the Olympus *i-SPEED* would have a focal length of 25mm and an iris range of f/1.4 to f/22.

When purchasing lenses for the Olympus *i-SPEED* , it must be remembered that the CMOS imager is quite large in size, so a 1” format (minimum) lens is required.

Chapter 8 Maintenance

8.1 Cleaning

To prevent electric shock or damage to equipment, always disconnect from the power supply before attempting to clean.

Camera CMOS protective glass and CDU screen

Clean using lens tissues moistened with a solvent solution composed of 70% ether / 30% industrial methylated spirits.
DO NOT use hard or abrasive materials.

Camera cooling holes

Periodically inspect the camera cooling holes to ensure they are not blocked with fluff, dirt etc. Clean as necessary.

General cleaning

Wipe equipment clean with a soft cloth dampened with a mild detergent solution.

8.2 Storage and transportation

After use

Always pack the product in the kit case after use or for transportation.

Case strap

For security and to prevent inadvertent opening of the case during transportation, it is recommended that the case strap is secured around the case.

8.3 Repair

The *i-SPEED* camera contains a user replaceable fuse located in the rear panel. There are no other user repairable components.

Chapter 9 Spares and Accessories

Spares

	Part No.
Camera – Colour	K10004130
Camera – Mono	K10004129
Controller Display Unit	K7504248
Power Supply	K7505046
Mains Cable – UK	7145454
Mains Cable – Europe	7145462
Mains Cable – USA	7318375
Instructions (English)	K10004139
Camera fuse (pack of 5)	7502254
Controller Cable, 3m	K7504982
Trigger Switch	K10004138
PCMCIA Compact Flash Adapter	K7505053
Transit Case with Outer Sleeve	K7505054
Case strap	K3931429

Accessories

Controller Cable, 10m	K7504984
12V DC input cable	K7504985
Compact Flash Card – 1Gb	1163123

In addition to the above items, a range of flash cards, tripods, lenses and lighting equipment is also available, along with three PC software options, Basic, Advanced and Deluxe. Please contact Olympus for further information.

Chapter 10 Specifications

10.1 i-SPEED Camera

Camera physical

Dimensions	
Size	W 106mm x H 98mm x L 264mm nominal
Weight	2kg nominal

Mechanical connections	
Tripod mounting	1x standard tripod mount (¼" Whitworth thread)
Lens mounting	Standard C-mount
Back focus	Nominal position 17mm. C-mount can be screwed in 1mm & out 3mm. Rotary control locks the C-mount in position
Accessory mounting	4x ¼" Whitworth thread fixing holes on the base

Electrical connections

Power input	Lemo EGG.OB.304.CLV			
Pinout	1	Ground	3	+12V
	2	+12V	4	Ground
Input voltage	12VDC ±10%			
Power consumption	Camera: 28W max System: 36W max			

Fuse	
Type	20 x 5mm cartridge (coin slot screw access)
Rating	3.15AH 250V

Controller Connector				
Standard LVDS connector, 26 way MDR				
Feature connector	26 way high density D sub female			
Pinout	3	Trigger input	4	Trigger ground
Trigger in	Level: 5V TTL, 12V maximum Impedance: 10k ohms (pulled to +5V for trigger switch)			

Ethernet	RJ45: Used for software update if further releases become available			
Pinout	1	TXD1+	5	NC
	2	TXD1-	6	RXD2-
	3	RXD2+	7	NC
	4	NC	8	NC
Ethernet signal	10 / 100 Base-T, auto switching			
Link (in RJ45)	Link status is indicated by two bi-colour red-green LED's:			
	Top red: 100Mb connection, half-duplex link			
	Top green: 100Mb connection, full-duplex link			
	Bottom red: 10Mb connection, half-duplex link			
	Bottom green: 10Mb connection, full-duplex link			
Activity (in RJ45)	Indicated by flashing of the appropriate LED in the appropriate colour (see above)			
SVGA	15 way high density D sub female, PC standard			
Pinout	1	Red video	6	Red ground
	2	Green video	7	Green ground
	3	Blue video	8	Blue ground
	13	Horizontal sync	10	Sync ground
	14	Vertical sync	*	Other pins no connection
SVGA video output	SVGA (800 x 600) 60Hz			
Composite video out	BNC			
Standard	NTSC / PAL switchable			
Level	1Vp-p			
Impedance	75 Ohms			
PCMCIA Port				
Standard	PCMCIA "memory card" format ATA specification, Type II			
Vpp Level	0V, 5V, auto select			
Vcc Level	3V3, 5V, auto select			
Connection	Hot swappable			

Performance characteristics

Resolutions, speeds & record times	
Sensor	CMOS
Resolution	800 x 600 active pixels
Frame rate	Maximum: 1,000 fps Minimum: 60 fps

Nominal values of speeds and resolutions

Resolution H	Resolution V	Pixels per frame	Frame speed	Images in Memory	Record time
800	600	480000	60	2236	37.27
800	600	480000	100	2236	22.36
800	600	480000	150	2236	14.91
800	600	480000	200	2236	11.18
800	600	480000	300	2236	7.45
800	600	480000	400	2236	5.59
800	600	480000	500	2236	4.47
800	600	480000	600	2236	3.73
800	600	480000	800	2236	2.80
800	600	480000	1000	2236	2.24

Trigger	
Trigger input	Position: User controllable, variable in 10% steps as follows: 0% (recording stops one full buffer length after the trigger, so video clip starts at trigger moment) 100% (recording stops immediately, preserving previous video so video clip ends at trigger moment)Edge: Programmable in menu system

Shutter	
Normal mode	Range: Frame time to frame time / 200 (200x)

Video update for Controller Display Unit & SVGA port	
Refresh rate	The LCD will be refreshed at 60Hz, regardless of video or graphics activity
Playback rate	Video may be played back at speeds from stop frame up to 3,840Hz
Viewfinder mode	At all times, except during playback, video from the sensor will be displayed on the screen at an update rate of 60Hz.
Fixed pattern noise correction	
Resolution	Full resolution of CMOS sensor
Effectiveness	Correction to 0.4%
Black reference	Manual, by user
White balance	
Type	Auto white balance, single shot operation, no time limit on hold, and pre-set options
Range	To correct for daylight, fluorescent light, 60W mains tungsten (Anglepoise) and the full range of Olympus light sources.
PCMCIA card interface	
File type	The video will be saved in “*.AVI” and “*.BMP” format, non-compressed and with no audio channel, compatible with Windows 95/98/ME/NT/2000/XP
Filing system	FAT 32 style system, compatible with windows 95/98/ME/NT/2000/XP
Data	The user data and other information will also be saved to the PCMCIA card, locked to the relevant image
Card functions	Format, delete file, select clip start and end
Real time clock & settings memory	
Purpose	The system will retain the time of day and date while the power is switched off, along with key user settings
Retention time	The battery will power the clock for approx. 10 years
Battery type	Lithium coin cell

Software facilities

General	
Languages	English, French, German, Spanish

10.2 Controller Display Unit (CDU)

Dimensions	
Size	W 273mm x H 214mm x D 51mm nominal
Weight	1.5kg nominal
Stand	A flip-out stand with ratchet positions of: -3°, 42°, 87°, 132°, 177°. When in the 177° position, the stand can be used as a hanger
Connector	
Type	Standard LVDS connector, 26 way MDR
Electrical	
Input voltage	5V ± 10%, 12V ± 10%
Input power	<2W, <8W at nominal voltages, derived from camera
Resolution	800 x 600
Brightness	350 cd/m^2

10.3 Cables

Controller cable (2 sizes)	
Length	3m (& 10m accessory)
Cable type	Multicore, double screened
Connectors	Overmoulded LVDS, 26 way MDR
12V DC cable accessory	
Length	2.2m
Cable type	6 core, round
Connectors	Lemo FGG.OB.304.CLAD52Z
User equipment connector	XLR-3M
Pinout	1 +12V 2 Ground 3 N/C Body Braid screen

10.4 Power supply

Dimensions	
Size	130mm x 58mm x 30mm nominal
Weight	0.4kg nominal
Mains input	
Socket type	IEC
Fuse	Internal, not user replaceable
Power output	
Lead length	2.2m nominal
Connector	Lemo FGG.OB.304.CLAD52Z
Electrical	
Input	100–240VAC ± 10%, 50-60Hz
Output	12VDC, 36W minimum

10.5 Trigger switch

Dimensions	
Size	L 90mm x 20mm diameter nominal
Weight	60g nominal
Cable	Integral, black, 2m nominal length, with strain relief
Connector	26 pin D-type high density male
Switch	Press to close, momentary

i-SPEED 2

For higher frame rate, larger internal memory and cameras with data logging capability, please see our range of *i-SPEED 2* cameras.

10.6 Regulatory Status

This mark on the *i-SPEED* camera indicates conformity with the requirements of EC Directives 89/336/EEC relating to electromagnetic compatibility and for the 12V DC power supply, compliance with Directive 73/23/EEC, as amended by 93/68/EEC, relating to electrical equipment designed for use within certain limits (Low Voltage Directive). The *i-SPEED* camera has been designed and tested to meet the requirements of the following standards:

EN 61000-6-4:2001	EMC Emissions
EN 61000-6-2:2001	EMC Immunity
EN 61000-3-2/3:2000	
EN 60950	Electrical Safety

10.7 Environmental

Temperature	Operation: 0˚C to +40˚C Storage: -20˚C to +60˚C
Pressure	71kPa to 106kPa
Relative humidity	95% at 40˚C non-condensing
Fluid ingress	All items: No resistance to fluid ingress
Attitude of operation	All items will be capable of operation in any orientation
Attitude of storage / transit	All items will be capable of storing / transporting in any orientation

10.8 Compatibility

Interchangeability	
Any item in the standard set or accessories may be changed for another identical item and the system will still function correctly.	
External compatibility	
Light sources	ALS-150U, KLS-3250, ILH-2 series, ILK-7 series, ILV-C1, ILK-C ILV-2, ILP-1 (note that the ILP-1 lamp operates on high frequency AC and can therefore introduce a mild flicker in video taken at high frame rates and fast shutter speeds)
Borescopes	Series 5 Borescopes, IFxD4 Fiberscopes, IFxC5 Fiberscopes
Adaptors	AK2-10C, AK2-5C, AK2-20C, AI-10C, AI-11C, AI-12C
Lenses	Standard range of C-mount lenses: 12-75mm (2/3" format zoom) 6.5mm, 12.5mm, 25mm, 50mm, 75mm (1" format fixed focus)
TV monitors	PAL, NTSC and auto selecting video monitors, PAL and NTSC LCD monitors
PC monitors	Standard PC SVGA compatible monitors

10.9 End of life

In accordance with European Directive 2002/96/EC on Waste Electrical and Electronic Equipment, this symbol indicates that the product must not be disposed of as unsorted municipal waste, but should be collected separately. Refer to your local Olympus distributor for return and/or collection systems available in your country.

The Olympus *i-SPEED* is Made in the UK by KeyMed, an Olympus group company.

OLYMPUS CORPORATION

Shinjuku Monolith, 3-1 Nishi-Shinjuku 2-chome, Shinjuku-ku, Tokyo 163-0914, Japan
Fax: (03) 6901-4911 Telephone: (03) 6901-4038

OLYMPUS DEUTSCHLAND GMBH

(Premises/Goods delivery) Wendenstrasse 14-18, D-20097 Hamburg, Germany
(Letters) Postfach 10 49 08, D-20034 Hamburg, Germany Telephone: (040) 237730

OLYMPUS SURGICAL & INDUSTRIAL AMERICA INC.

One Corporate Drive, Orangeburg, N.Y. 10962, U.S.A.
Fax: (845) 398-9444 Telephone: (845) 398-9400

KEYMED LTD.

KeyMed House, Stock Road, Southend-on-Sea, Essex SS2 5QH, United Kingdom
Fax: (01702) 465677 Telephone: (01702) 616333

OLYMPUS SINGAPORE PTE LTD.

491B, River Valley Road #12-01/04, Valley Point Office Tower, Singapore 248373
Fax: 834-2438 Telephone: 834-0010

OLYMPUS MOSCOW LIMITED LIABILITY COMPANY

117071, Moscow, Malaya Kaluzhskaya 19, bld. 1, fl.2, Russia
Fax: (095) 958-2277 Telephone: (095) 958-2245

OLYMPUS AUSTRALIA PTY. LTD.

31 Gilby Road, Mount Waverley, Victoria 3149, Australia
Fax: (03) 9543-1350 Telephone: (03) 9265-5400

Issue 1
October 2006

Printed in UK
K10004139/1006